Diritti riservati All rights reserved

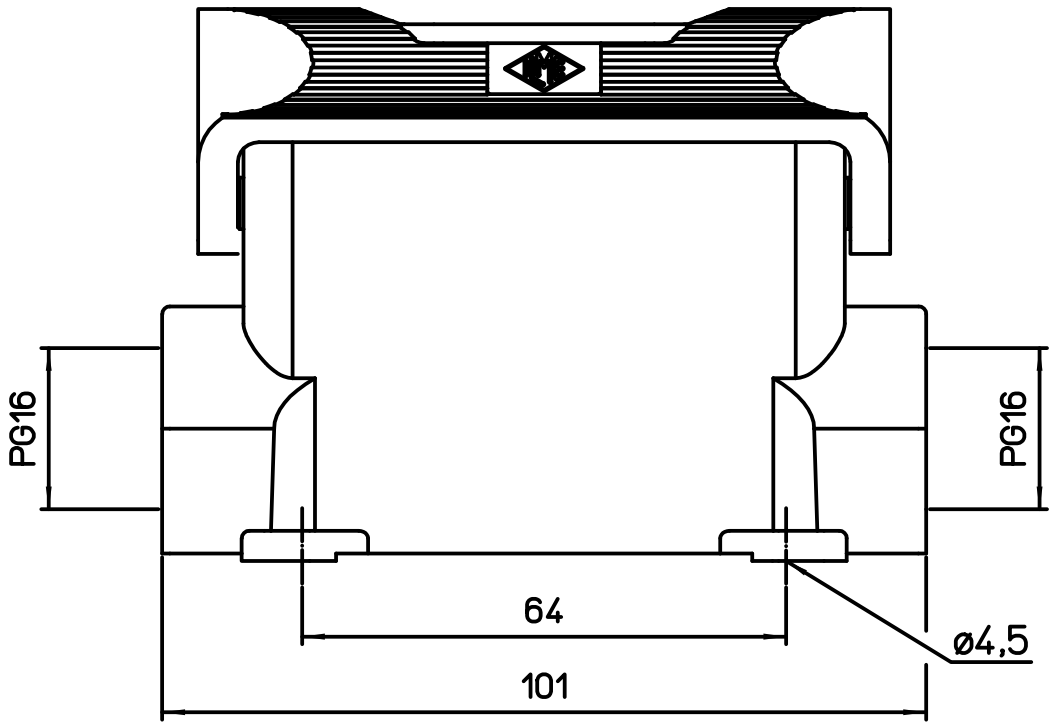

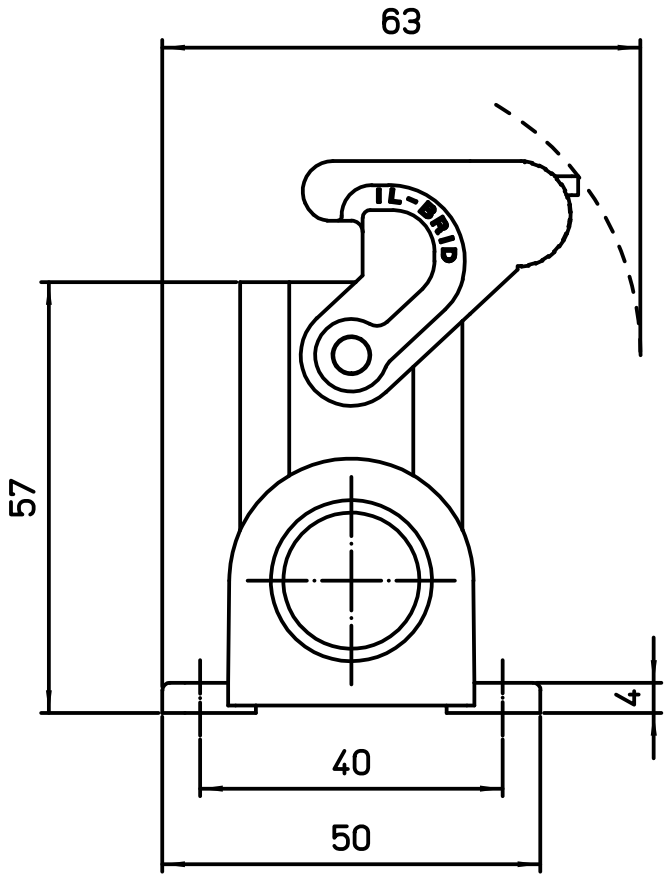

dimensions in mm	CZAP 25 L2	Scale
Date 25/10/18	Surface mounting housing with single lever, 2xPG16	1:1
Sign. D.Cominelli		